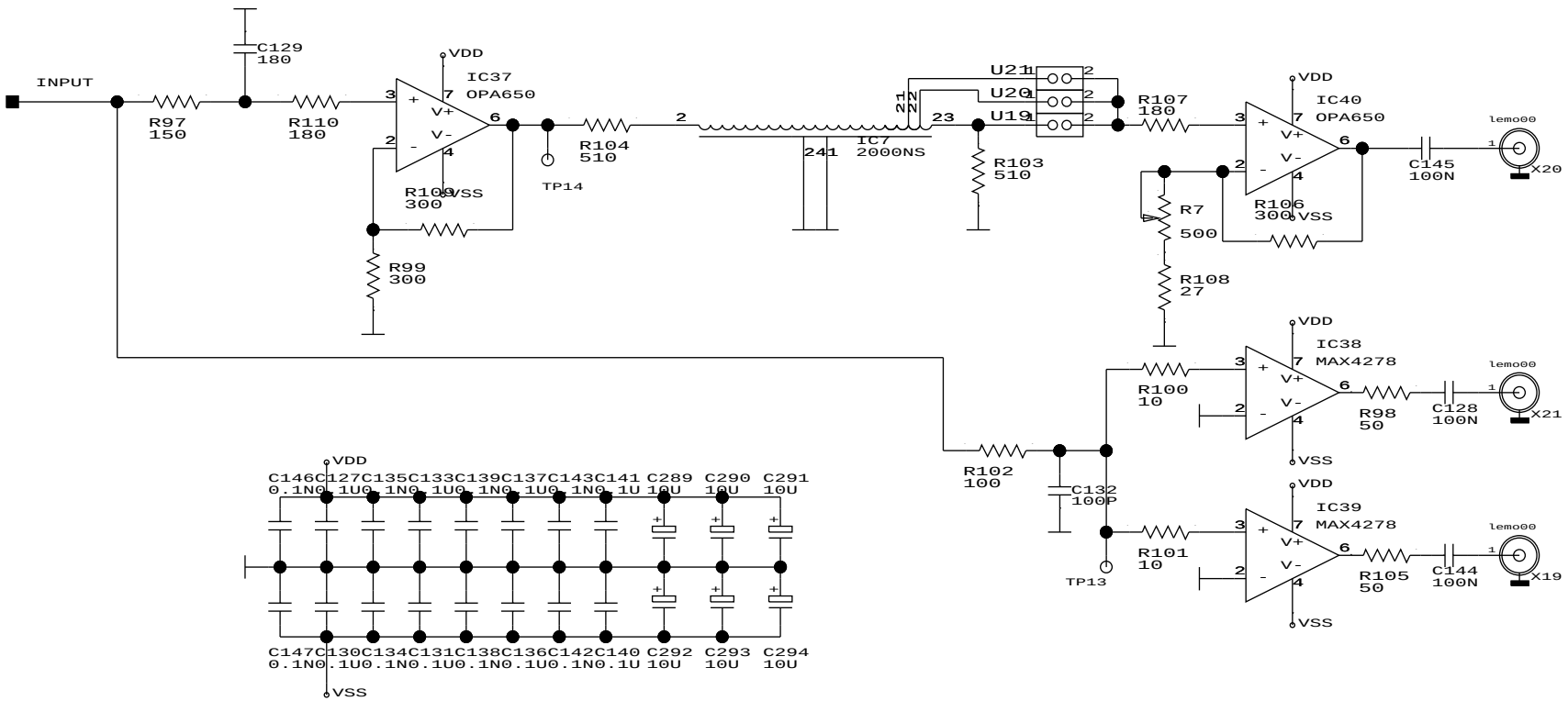

ORBII 12fold analog optical reciever
board1: delayline and fanout

TM Tek
Berlin

Design by:
DR. TH. MIKOLAJSKI

Date:

Sheet
of 13

$1|1236\$1